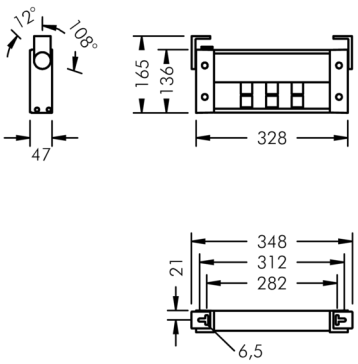

Ecovision Mini

8 706 055 109

6 × 2,5 W, 1253 lm, 4000 K neutral white, DALI, wall washer 15° / 103°

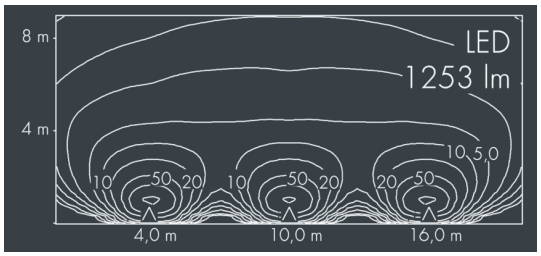

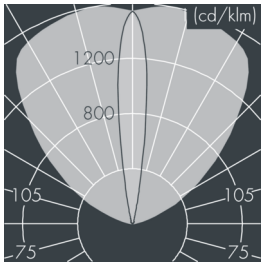

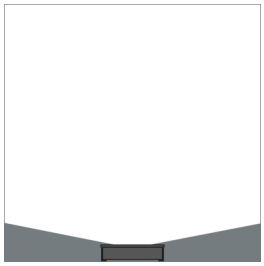

Customized solutions and modifications are possible: Special RAL, DB or NCS colours as polyester powder coat, luminaires in 2700 K and other colour temperatures and versions for high ambient temperature.

Specification text

housing made corrosion-resistant die-cast aluminum AlSi12, polyester powder coated by high-quality and UV-stabilized coating process, Colour: silver grey , all exterior parts are stainless steel, UV stabilised, impact-resistant polycarbonate cover , silicon gasket, with 4 stainless steel screws, mounting brackets: 2 drilled holes Ø 6,5 mm, spacing 282 mm, tilt range: 120°, cable gland: PG11, connecting terminal: 5 pole, highly efficient optics made of transparent thermoplastic for precise lighting tasks , integral driver (DALI), CRI > 80, max 2 SDCM, service life L90/B10 > 50.000 h,
Beam angle (FWHM): 15° / 103°, luminous flux: 1253 lm, wattage: 15 W, delivered lumens 84 lm/W, protection type IP65, protection class I, impact resistance IK10, windage area 0,04 m², dimensions (L×H×W): 328 × 47 × 135 mm, weight 2.5 kg

The modular luminaire design makes the replacement of components possible. The product meets the demands of the applicable EU guidelines and product safety regulations and bears the CE mark.

IP65 IK10

Specification

Wattage	15 W	Beam angle (FWHM)	15° / 103°
Delivered lumens	84 lm/W	Housing colour	silver grey
Light source	LED 4000 K	Power supply cable	Ø 7 – 9 mm
Color Rendering Index	CRI > 80	Protection type	IP65
Colour tolerance	max 2 SDCM	Protection class	I
Lifetime ta 25° C	L90/B10 > 50.000 h	Impact resistance	IK10
Control gear	DALI	Windage area	0,04m²
Input voltage AC	220 – 240 V	Dimensions	328 × 47 × 135 mm
Input voltage DC	220 – 240 V	Weight	2,50 kg
Voltage protection	3 kV L/N | 4 kV L/PE	Max. ambient temperature ta	35°
Luminaires per B16A / C16A	50 / 85		