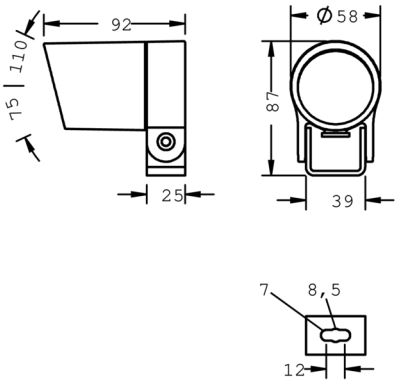

Minispot 1 - 48 V

8 924 067 049

2 W, 133 lm, 2700 K warm white,
medium wide beam 25°

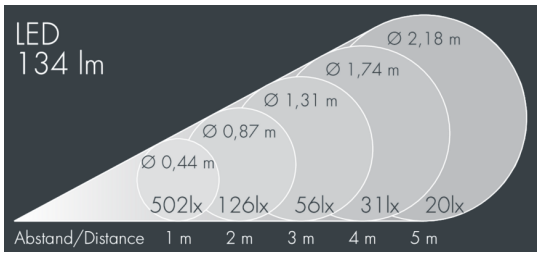

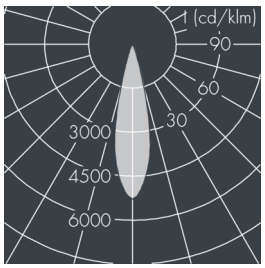

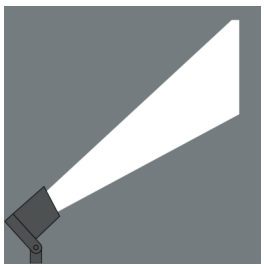

Customized solutions and modifications are possible: Special RAL, DB or NCS colours as polyester powder coat, luminaires in 2700 K and other colour temperatures and versions for high ambient temperature.

Specification text

housing made of die-cast aluminum AlSi12, polyester powder coated by high-quality and UV-stabilized coating process, Colour: white RAL 9002, all exterior parts are stainless steel, tempered high effiency safety glass, anti-reflective coating from 1 side, silicon gasket, with 2 stainless steel screws, mounting bracket: 1 long hole Ø 7 mm, spacing 12 mm, 1 center hole Ø 8.5 mm, tilt range: 185°, cable gland: M16, connecting terminal: 3 pole, highly efficient optics made of transparent thermoplastic for precise lighting tasks , Constant current control (48 V DC), CRI > 80, 3, service life L90/B10 > 50.000 h, Beam angle (FWHM): 25°, luminous flux: 133 lm, wattage: 2 W, delivered lumens 66 lm/W, protection type IP65, protection class III, impact resistance IK08, windage area 0,006 m², dimensions: Ø 58 mm, width 92 mm, weight 0.5 kg

The modular luminaire design makes the replacement of components possible. The product meets the demands of the applicable EU guidelines and product safety regulations and bears the CE mark.

III IP65 IK08

Specification

Wattage	2 W	Beam angle (FWHM)	25°
Delivered lumens	66 lm/W	Housing colour	white RAL 9002
Light source	LED 2700 K	Power supply cable	Ø 5 – 9 mm
Color Rendering Index	CRI > 80	Protection type	IP65
Colour tolerance	3	Protection class	III
Lifetime ta 25° C	L90/B10 > 50.000 h	Impact resistance	IK08
Control gear	on / off	Windage area	0,006m²
Input voltage DC	24 – 48 V	Dimensions	Ø 58 mm, width 92 mm
		Weight	0,50 kg
		Max. ambient temperature ta	40°