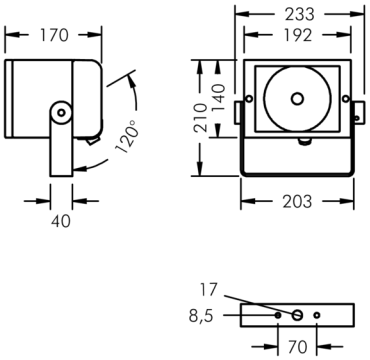

Superlight Compact

8 861 351 029

For ceramic metal halide lamps (HIT-CE)

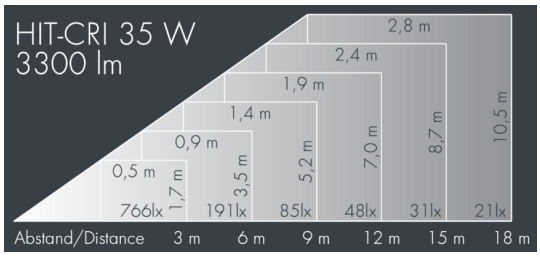

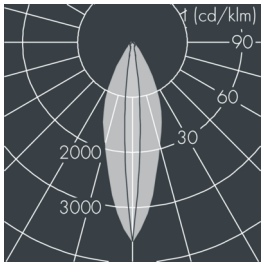

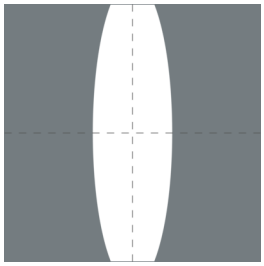

Customized solutions and modifications are possible: Special RAL, DB or NCS colours as polyester powder coat, luminaires in 2700 K and other colour temperatures and versions for high ambient temperature.

Specification text

housing made of die-cast aluminum AlSi12, polyester powder coated by high-quality and UV-stabilized coating process, Colour: silver grey , all exterior parts are stainless steel, tempered safety glass, anti-reflective coating from 1 side, silicon gasket, closure with 2 stainless steel screws, powder coated aluminum mounting bracket with tilt scale: 2 drilled holes Ø 8.5 mm, spacing 70 mm, 1 centre hole Ø 17 mm, tilt range: 120°, cable gland: PG 11, connecting terminal: 3 pole, rotationally symmetrical high gloss aluminum reflector, integral ballast and ignitor,
LPF, HPF available on request, Beam angle (FWHM): 33°, luminous flux: 3300 lm, wattage: 35 W, delivered lumens 69 lm/W, protection type IP65, protection class I, impact resistance IK08, windage area 0,04 m², dimensions (L×H×W): 193 × 199 × 139 mm, weight 3.72 kg

The modular luminaire design makes the replacement of components possible. The product meets the demands of the applicable EU guidelines and product safety regulations and bears the CE mark.

IP65 IK08

Specification

Wattage	35 W	Beam angle (FWHM)	33°
Delivered lumens	69 lm/W	Housing colour	silver grey
Control gear	on / off	Power supply cable	Ø 5 – 13 mm
		Protection type	IP65
		Protection class	I
		Impact resistance	IK08
		Windage area	0,04m²
		Dimensions	193 × 199 × 139 mm
		Weight	3,72 kg