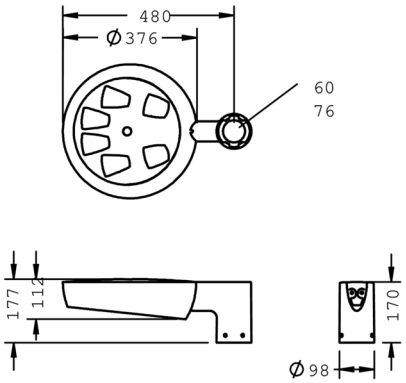

Metaspace

8 217 366 149

6 × 6,3 W, 3741 lm, 3000 K warm white, DALI, asymmetrical beam 63°

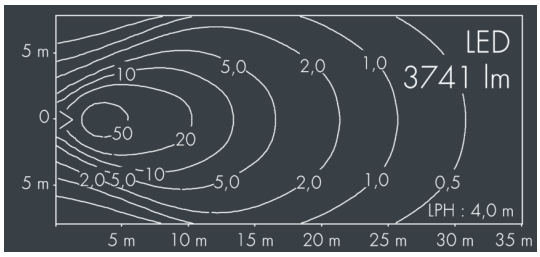

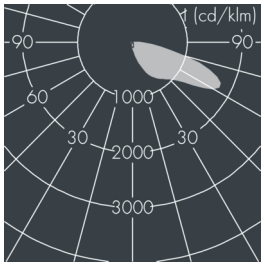

Customized solutions and modifications are possible: Special RAL, DB or NCS colours as polyester powder coat, luminaires in 2700 K and other colour temperatures and versions for high ambient temperature.

Specification text

housing made of corrosion-resistant die-cast aluminum AlSi12, polyester powder coated by high-quality and UV-stabilized coating process, Colour: white RAL 9002, all exterior parts are stainless steel, tempered high effiency safety glass, anti-reflective coating from 1 side, dark screenprint, silicon gasket, closure with 5 stainless steel screws, with pole top fitter for 1 luminarie for poles Ø 60/76 mm, fastening with 4 set screws M8, cable gland: M20, with 8 m cable H07RN-F5G1, connecting terminal: 5 pole, highly efficient metallized PC reflector, integral driver (DALI), CRI > 80, 3, service life L80/B20 > 50.000 h, luminous flux: 3741 lm, wattage: 38 W, delivered lumens 99 lm/W, protection type IP65, protection class II, impact resistance IK08, windage area 0,056 m², dimensions (L×H×W): 376 × 112 × 15 mm, weight 5.1 kg

The modular luminaire design makes the replacement of components possible. The product meets the demands of the applicable EU guidelines and product safety regulations and bears the CE mark.

IP65 IK08

Specification

Wattage	38 W	Housing colour	white RAL 9002
Delivered lumens	99 lm/W	Protection type	IP65
Light source	LED 3000 K	Protection class	II
Color Rendering Index	CRI > 80	Impact resistance	IK08
Colour tolerance	3	Windage area	0,056m²
Lifetime ta 25° C	L80/B20 > 50.000 h	Dimensions	376 × 112 × 15 mm
Control gear	DALI	Weight	5,10 kg
Input voltage AC	220 – 240 V	Max. ambient temperature ta	40°
Input voltage DC	220 – 240 V		
Voltage protection	6 kV L/N | 10 kV L/PE		
Luminaires per B16A / C16A	20 / 33		