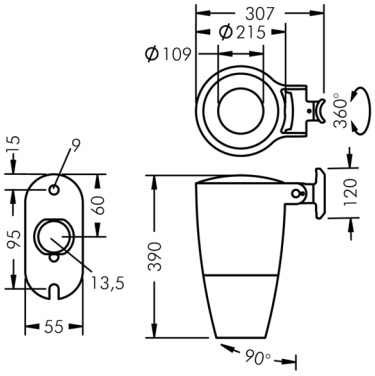

Monospot Gobo

8 905 256 259

55 W, 1066 lm, 3000 K warm white, 1-10V,
63 mm focal length 29°

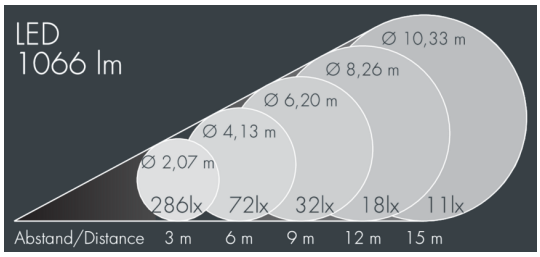

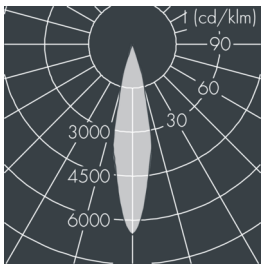

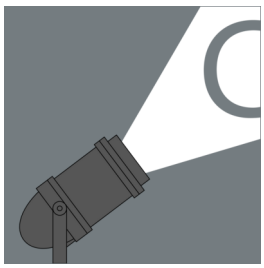

Specification text

housing made of corrosion-resistant die-cast aluminum AlSi12, polyester powder coated by high-quality and UV-stabilized coating process, Colour: silver grey , all exterior parts are stainless steel, tempered safety glass, anti-reflective coating from 1 side, dark screenprint, silicon gasket, closure with 3 stainless steel screws, for installation on poles Ø 60 - 100 mm, tiltable base made of powder coated aluminum, 2 drilled holes Ø 9 mm, spacing 95 mm, 1 centre hole Ø 13.5 mm, tilt range: 90°, 360° adjustable, cable gland: M20, connecting terminal: 5 pole, focusable projection lens for precise light control and sharp-edged image projections, integral 1-10 V driver, CRI > 80, Beam angle (FWHM): 29°, luminous flux: 1066 lm, wattage: 55 W, delivered lumens 19 lm/W, protection type IP65, protection class I, impact resistance IK08, windage area 0,076 m², dimensions: Ø 215 mm, width 390 mm, weight 8 kg

The modular luminaire design makes the replacement of components possible. The product meets the demands of the applicable EU guidelines and product safety regulations and bears the CE mark.

IP65 IK08

Specification

Wattage	55 W	Beam angle (FWHM)	29°
Delivered lumens	19 lm/W	Housing colour	silver grey
Light source	LED 3000 K	Power supply cable	Ø 6 – 13 mm
Color Rendering Index	CRI > 80	Protection type	IP65
Control gear	1-10V	Protection class	I
		Impact resistance	IK08
		Windage area	0,076m²
		Dimensions	Ø 215 mm, width 390 mm
		Weight	8,00 kg
		Max. ambient temperature ta	35°