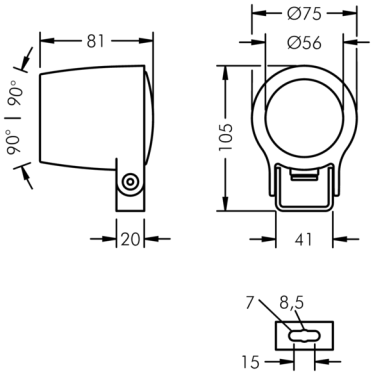

Monospot Mini

8 900 066 029

3 W, 130 lm, 3000 K warm white,
linear, vertical 24° / 6°

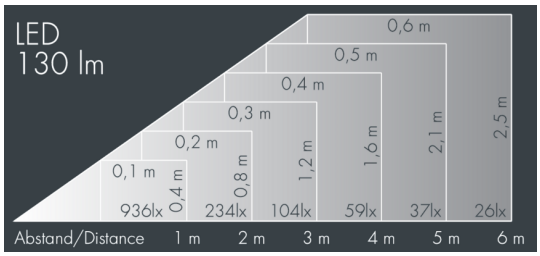

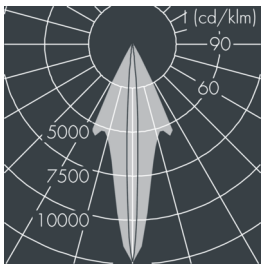

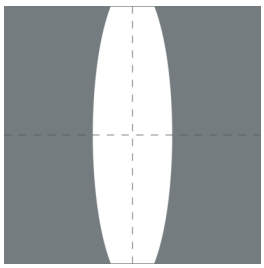

Customized solutions and modifications are possible: Special RAL, DB or NCS colours as polyester powder coat, luminaires in 2700 K and other colour temperatures and versions for high ambient temperature.

Specification text

housing made of corrosion-resistant die-cast aluminum AlSi12, polyester powder coated by high-quality and UV-stabilized coating process, Colour: white RAL 9002, all exterior parts are stainless steel, tempered safety glass, anti-reflective coating from 1 side, dark screenprint, silicon gasket, closure with 2 stainless steel screws, 1 elongated hole Ø 7 mm, spacing 15 mm, 1 centre hole Ø 8.5 mm, tilt range: 180°, cable gland: M16, connecting terminal: 3 pole, precise PMMA optics, integral driver (AC/DC), CRI > 80, max 2 SDCM,
service life L90/B10 > 50.000 h,
Beam angle (FWHM): 24° / 6°, luminous flux: 130 lm, wattage: 3 W, delivered lumens 43 lm/W, protection type IP65, protection class I, impact resistance IK08, windage area 0,006 m², dimensions: Ø 75 mm, width 81 mm, weight 0.6 kg

The modular luminaire design makes the replacement of components possible. The product meets the demands of the applicable EU guidelines and product safety regulations and bears the CE mark.

IP65 IK08

Specification

Wattage	3 W	Beam angle (FWHM)	24° / 6°
Delivered lumens	43 lm/W	Housing colour	white RAL 9002
Light source	LED 3000 K	Power supply cable	Ø 5 – 9 mm
Color Rendering Index	CRI > 80	Protection type	IP65
Colour tolerance	max 2 SDCM	Protection class	I
Lifetime ta 25° C	L90/B10 > 50.000 h	Impact resistance	IK08
Control gear	on / off	Windage area	0,006m²
Input voltage AC	100 – 240 V	Dimensions	Ø 75 mm, width 81 mm
Input voltage DC	150 – 250 V	Weight	0,60 kg
Voltage protection	1 kV L/N | 1 kV L/PE	Max. ambient temperature ta	45°
Luminaires per B16A / C16A	157 / 317		